IV.B.3.b MCNC Logical Network Diagrams

For

Notice Of Funding Opportunity

Middle Mile Grant Program

National Telecommunications and Information Administration (NTIA)

NOTE: Please reference attachment "MCNC Technical Details Proposed Project" for additional information.

Drawing/System ID: Title Page Tabloid	
Created By : Matt Valenzisi	Date/Time: 08/17/2022 15:13:00
Revised By : Matt Valenzisi	Date/Time: 09/18/2022 19:16:48
Reviewed By: Jeremy Geelen	Date/Time: 09/18/2022 19:16:48
Last Printed Date/Time: 09/18/2022 19:16:48	

File Name: MCNC Logical Network Diagrams

!!! MCNC CONFIDENTIAL !!!
!!! Do NOT Distribute !!!

NOTE: Please reference attachment "MCNC Technical Details Proposed Project" for additional information.

Table of Contents

- Page 1 Of 17 - Title Page
- Page 2 Of 17 - Table Of Contents
- Page 3 Of 17 - High Level DWDM-Based Optical Network Segments Over Proposed Middle Mile Fiber Route: Sanford To Jacksonville
- Page 4 Of 17 - Sanford Co-Location Detail Central Carolina CC
- Page 5 Of 17 - Fayetteville Co-Location Detail Fayetteville State University
- Page 6 Of 17 - Clinton Co-Location Detail Sampson CC
- Page 7 Of 17 - Jacksonville Co-Location Detail NC State Highway Patrol
- Page 8 Of 17 - High Level DWDM-Based Optical Network Segments Over Proposed Middle Mile Fiber Route: Winston-Salem To Albemarle
- Page 9 Of 17 - Winston-Salem Co-Location Detail
- Page 10 Of 17 - Salisbury Co-Location Detail Rowan-Cabarrus CC
- Page 11 Of 17 - Albemarle Co-Location Detail Stanly CC
- Page 12 Of 17 - Polkton Co-Location Detail South Piedmont CC
- Page 13 Of 17 - Service Model Example 1: Commercial Last Mile Residential Service Provider Internet Access
- Page 14 Of 17 - Service Model Example 2: Nonprofit Last Mile Residential Service Provider Internet Access
- Page 15 Of 17 - Service Model Example 3: Nonprofit Last Mile Residential Service Provider Wireless Internet Access
- Page 16 Of 17 - Service Model Example 4: Commercial Last Mile Residential Service Provider Wireless Internet Access
- Page 17 Of 17 - High Level Perspective Proposed Middle Mile Fiber Routes

!!! MCNC CONFIDENTIAL !!!
!!! Do NOT Distribute !!!

High Level DWDM-Based Optical Network Segments Over Proposed Middle Mile Fiber Route: Sanford To Jacksonville

Key:

- Proposed Upfit Of Existing 2-Degree Or Multi-Degree ROADM
- Proposed New 2-Degree ROADM
- Existing Fiber
- Proposed New Fiber - 288 Strands In Existing Duct
- ****Proposed New Fiber - 288 Strands In New Duct
- Existing MCNC Owned And Operated Carrier-Neutral Co-Location Facility
- Proposed MCNC Owned And Operated Carrier-Neutral Co-Location Facility
- CE RTR ***Carrier Ethernet Router

①- Internet2, RTP, NC, 200G
②- Tier 1 ISP A, RTP, NC, 100G
③- Tier 1 ISP B, RTP, NC, 100G
④- Tier 1 ISP C, Winston-Salem, NC, 100G
⑤- Tier 1 ISP B, Winston-Salem, NC, 100G
⑥- Tier 1 ISP A, Huntersville, NC, 100G
⑦- Tier 1 ISP C, Huntersville, NC, 100G (CY22H2)
⑧- Tier 1 ISP D, Huntersville, NC, 20G
⑨- Internet2, Huntersville, NC, 200G

- Existing ROADM Degree
- New ROADM Degree

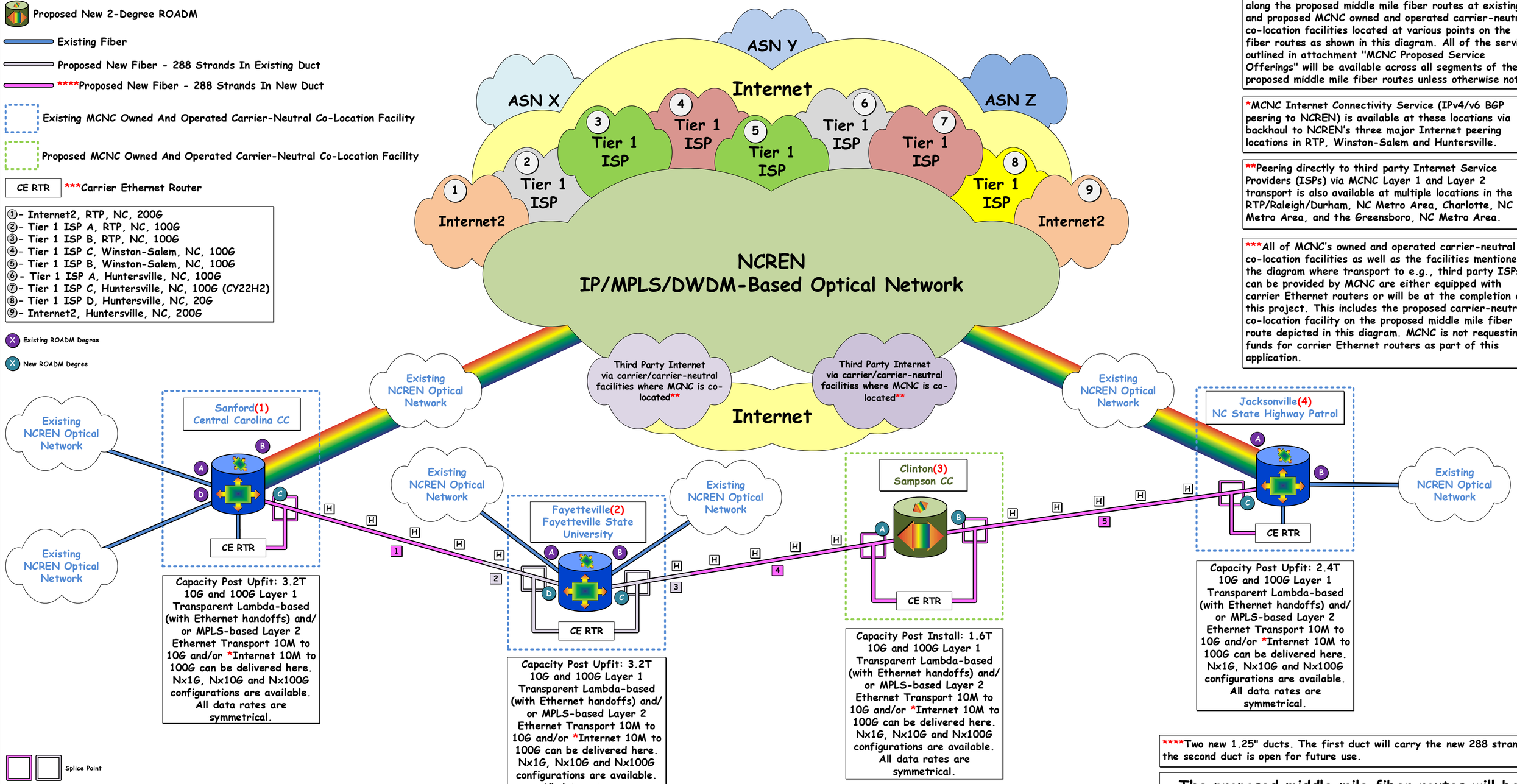

MCNC connectivity services (10G and 100G Layer 1 Transparent Lambda-based (with Ethernet handoffs) and/or MPLS-based Layer 2 Ethernet Transport 10M to 10G and/or Internet 10M to 100G) will be delivered along the proposed middle mile fiber routes at existing and proposed MCNC owned and operated carrier-neutral co-location facilities located at various points on the fiber routes as shown in this diagram. All of the services outlined in attachment "MCNC Proposed Service Offerings" will be available across all segments of the proposed middle mile fiber routes unless otherwise noted.

*MCNC Internet Connectivity Service (IPv4/v6 BGP peering to NCREN) is available at these locations via backhaul to NCREN's three major Internet peering locations in RTP, Winston-Salem and Huntersville.

**Peering directly to third party Internet Service Providers (ISPs) via MCNC Layer 1 and Layer 2 transport is also available at multiple locations in the RTP/Raleigh/Durham, NC Metro Area, Charlotte, NC Metro Area, and the Greensboro, NC Metro Area.

***All of MCNC's owned and operated carrier-neutral co-location facilities as well as the facilities mentioned in the diagram where transport to e.g., third party ISPs can be provided by MCNC are either equipped with carrier Ethernet routers or will be at the completion of this project. This includes the proposed carrier-neutral co-location facility on the proposed middle mile fiber route depicted in this diagram. MCNC is not requesting funds for carrier Ethernet routers as part of this application.

Splice Point

Hand Holes (HH) will be placed approximately 2,500' apart and strategically closer in more populated areas along the proposed fiber route.

(1) – See Page 4 "Sanford Co-Location Detail"
(2) – See Page 5 "Fayetteville Co-Location Detail"
(3) – See Page 6 "Clinton Co-Location Detail"
(4) – See Page 7 "Jacksonville Co-Location Detail"

****Two new 1.25" ducts. The first duct will carry the new 288 strands, the second duct is open for future use.

The proposed middle mile fiber routes will be built underground, using new fiber and new ducts unless otherwise noted.

1 – Sanford To Fayetteville *NEW* ~174,339ft/~53.14km/~33.02miles
2 – Sanford To Fayetteville *EXISTING* ~1,462ft/~.45km/~.28miles
3 – Fayetteville To Clinton *EXISTING* ~8,814ft/~2.69km/~1.67miles
4 – Fayetteville To Clinton *NEW* ~176,156ft/~53.69km/~33.36miles
5 – Clinton To Jacksonville *NEW* ~355,864ft/~108.47km/~67.40miles

NOTE: Please reference attachment "MCNC Technical Details Proposed Project" for additional information.

Drawing/System ID: NCREN SFJ Optical HL D Size	
Created By : Matt Valenzisi	Date/Time: 07/18/2022 23:31:30
Revised By : Matt Valenzisi	Date/Time: 09/18/2022 19:16:48
Reviewed By: Jeremy Geelen	Date/Time: 09/18/2022 19:16:48
Last Printed Date/Time: 09/18/2022 19:16:48	

File Name: MCNC Logical Network Diagrams

!!! MCNC CONFIDENTIAL !!!
!!! Do NOT Distribute !!!

Key:

- Proposed Upfit Existing 2-Degree Or Multi-Degree ROADM
- Existing Fiber
- ***Proposed New Fiber 288 Strands New Duct
- 2 Of 288 New Fiber Strands For Carrier Ethernet Ring
- 2 Of 288 New Fiber Strands DWDM ROADM Node Line Side For New Degree
- Existing Fiber Distribution Panel (FDP)
- New Fiber Distribution Panel (FDP)
- Hand Hole (HH)
- Existing MCNC Owned And Operated Carrier-Neutral Co-Location Facility
- X Existing ROADM Degree
- X New ROADM Degree
- B Bridge Cable
- **Building Entrance

Sanford Co-Location Detail
Central Carolina CC

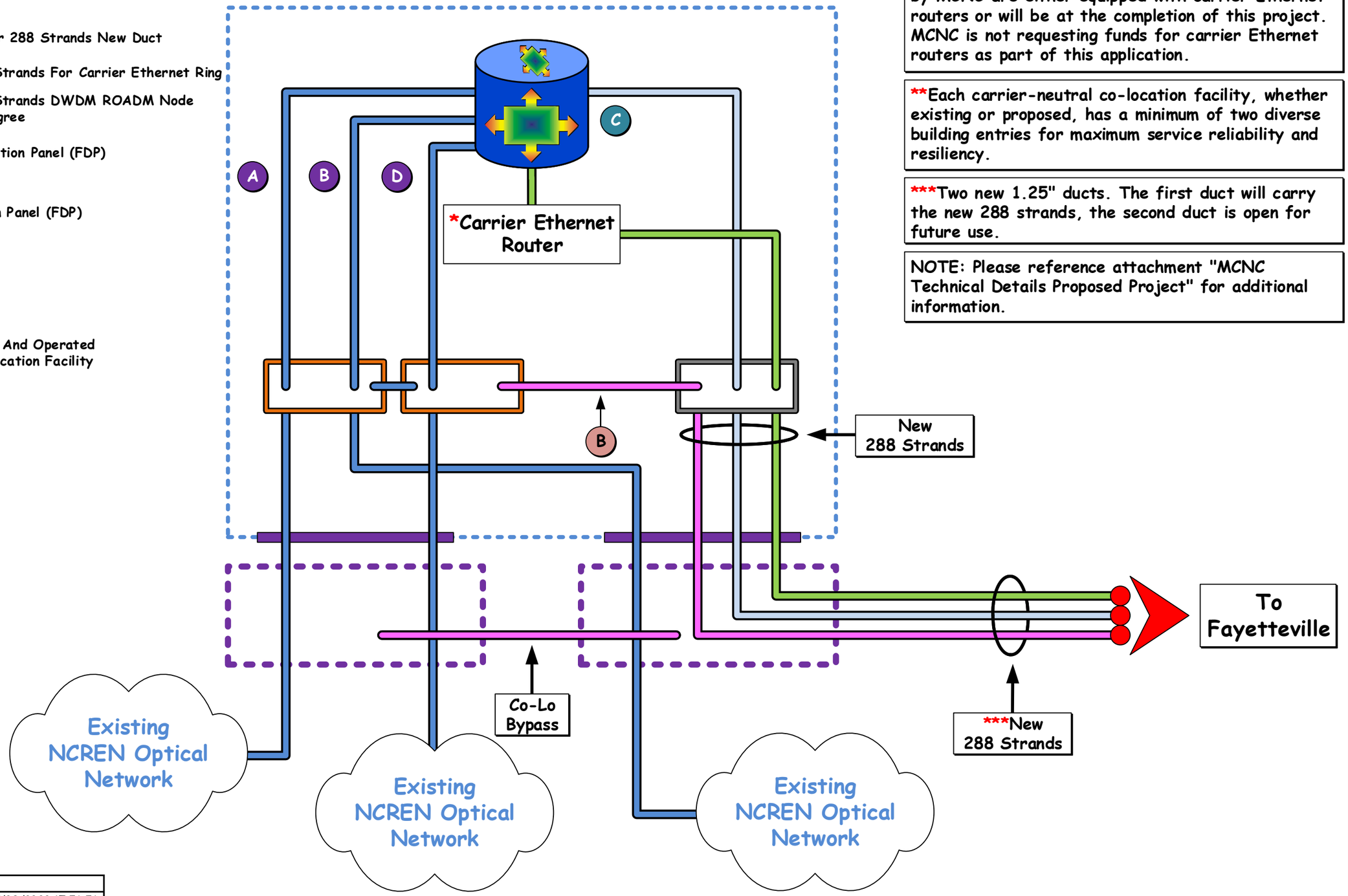

*All of MCNC's owned and operated carrier-neutral co-location facilities (existing and proposed) where transport to e.g., third party ISPs can be provided by MCNC are either equipped with carrier Ethernet routers or will be at the completion of this project. MCNC is not requesting funds for carrier Ethernet routers as part of this application.

**Each carrier-neutral co-location facility, whether existing or proposed, has a minimum of two diverse building entries for maximum service reliability and resiliency.

***Two new 1.25" ducts. The first duct will carry the new 288 strands, the second duct is open for future use.

NOTE: Please reference attachment "MCNC Technical Details Proposed Project" for additional information.

Drawing/System ID: San Co-Lo Dtl Tabloid	
Created By : Matt Valenzisi	Date/Time: 07/29/2022 17:56:56
Revised By : Matt Valenzisi	Date/Time: 09/18/2022 19:16:48
Reviewed By: Jeremy Geelen	Date/Time: 09/18/2022 19:16:48
Last Printed Date/Time: 09/18/2022 19:16:48	

File Name: MCNC Logical Network Diagrams

!!! MCNC CONFIDENTIAL !!!
!!! Do NOT Distribute !!!

Fayetteville Co-Location Detail
Fayetteville State University

Key:

- Proposed Upfit Existing 2-Degree Or Multi-Degree ROADM
- Existing Fiber
- ***Proposed New Fiber 288 Strands New Duct
- 2 Of 288 New Fiber Strands For Carrier Ethernet Ring
- 2 Of 288 New Fiber Strands DWDM ROADM Node Line Side For New Degree
- Proposed New Fiber - 288 Strands In Existing Duct
- Existing Fiber Distribution Panel (FDP)
- New Fiber Distribution Panel (FDP)
- Hand Hole (HH)
- Existing MCNC Owned And Operated Carrier-Neutral Co-Location Facility

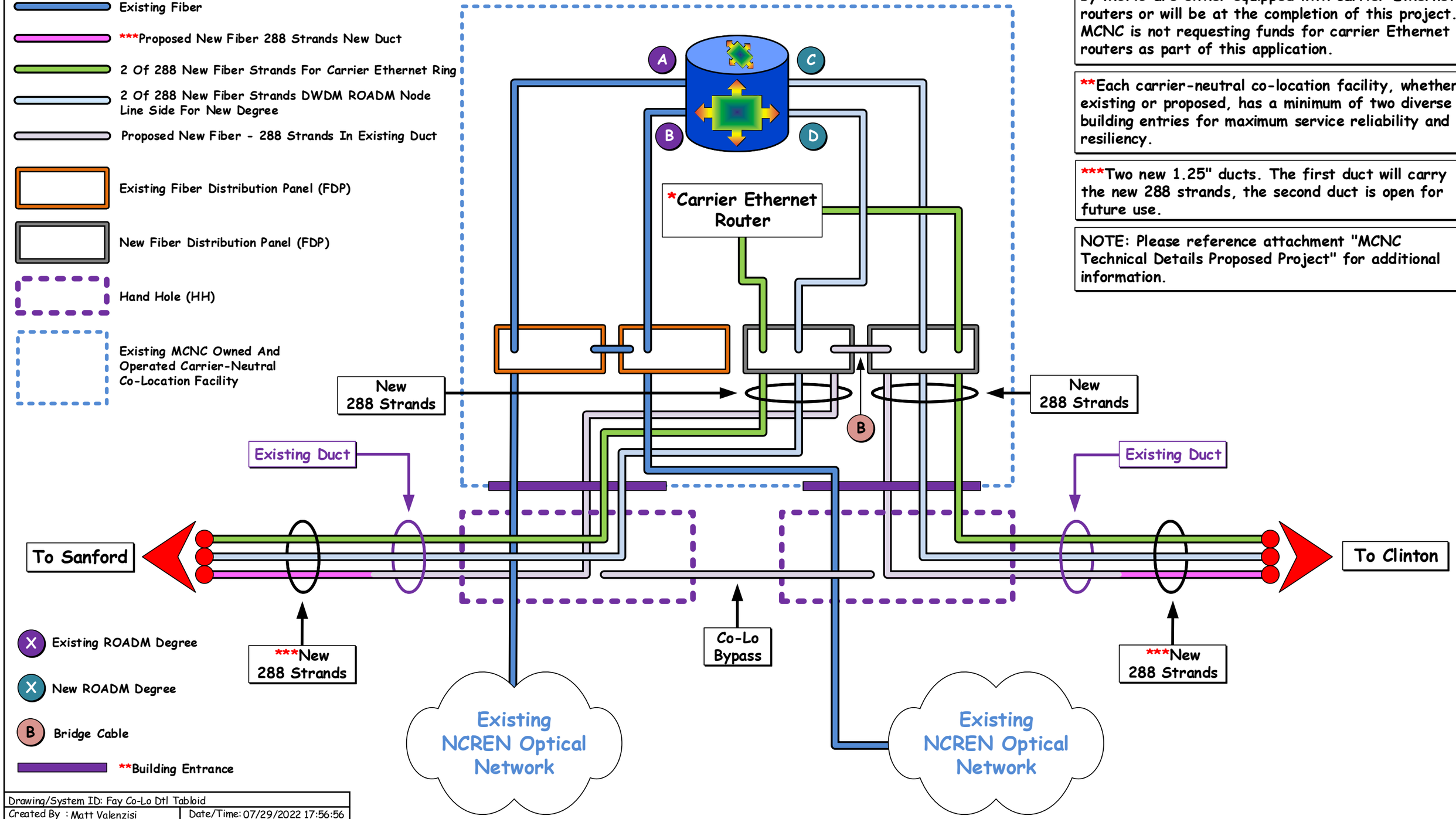

- Existing ROADM Degree
- New ROADM Degree
- Bridge Cable
- **Building Entrance

*All of MCNC's owned and operated carrier-neutral co-location facilities (existing and proposed) where transport to e.g., third party ISPs can be provided by MCNC are either equipped with carrier Ethernet routers or will be at the completion of this project. MCNC is not requesting funds for carrier Ethernet routers as part of this application.

**Each carrier-neutral co-location facility, whether existing or proposed, has a minimum of two diverse building entries for maximum service reliability and resiliency.

***Two new 1.25" ducts. The first duct will carry the new 288 strands, the second duct is open for future use.

NOTE: Please reference attachment "MCNC Technical Details Proposed Project" for additional information.

Drawing/System ID: Fay Co-Lo Dtl Tabloid	
Created By : Matt Valenzisi	Date/Time: 07/29/2022 17:56:56
Revised By : Matt Valenzisi	Date/Time:09/18/2022 19:16:48
Reviewed By: Jeremy Geelen	Date/Time:09/18/2022 19:16:48
Last Printed Date/Time: 09/18/2022 19:16:48	

File Name: MCNC Logical Network Diagrams

!!! MCNC CONFIDENTIAL !!!
!!! Do NOT Distribute !!!

Clinton Co-Location Detail Sampson CC

Key:

- Proposed New 2-Degree ROADM
- Existing Fiber
- ***Proposed New Fiber 288 Strands New Duct
- 2 Of 288 New Fiber Strands For Carrier Ethernet Ring
- 2 Of 288 New Fiber Strands DWDM ROADM Node Line Side For New Degree
- Existing Fiber Distribution Panel (FDP)
- New Fiber Distribution Panel (FDP)
- Hand Hole (HH)
- Proposed MCNC Owned And Operated Carrier-Neutral Co-Location Facility
- X Existing ROADM Degree
- X New ROADM Degree
- B Bridge Cable
- **Building Entrance

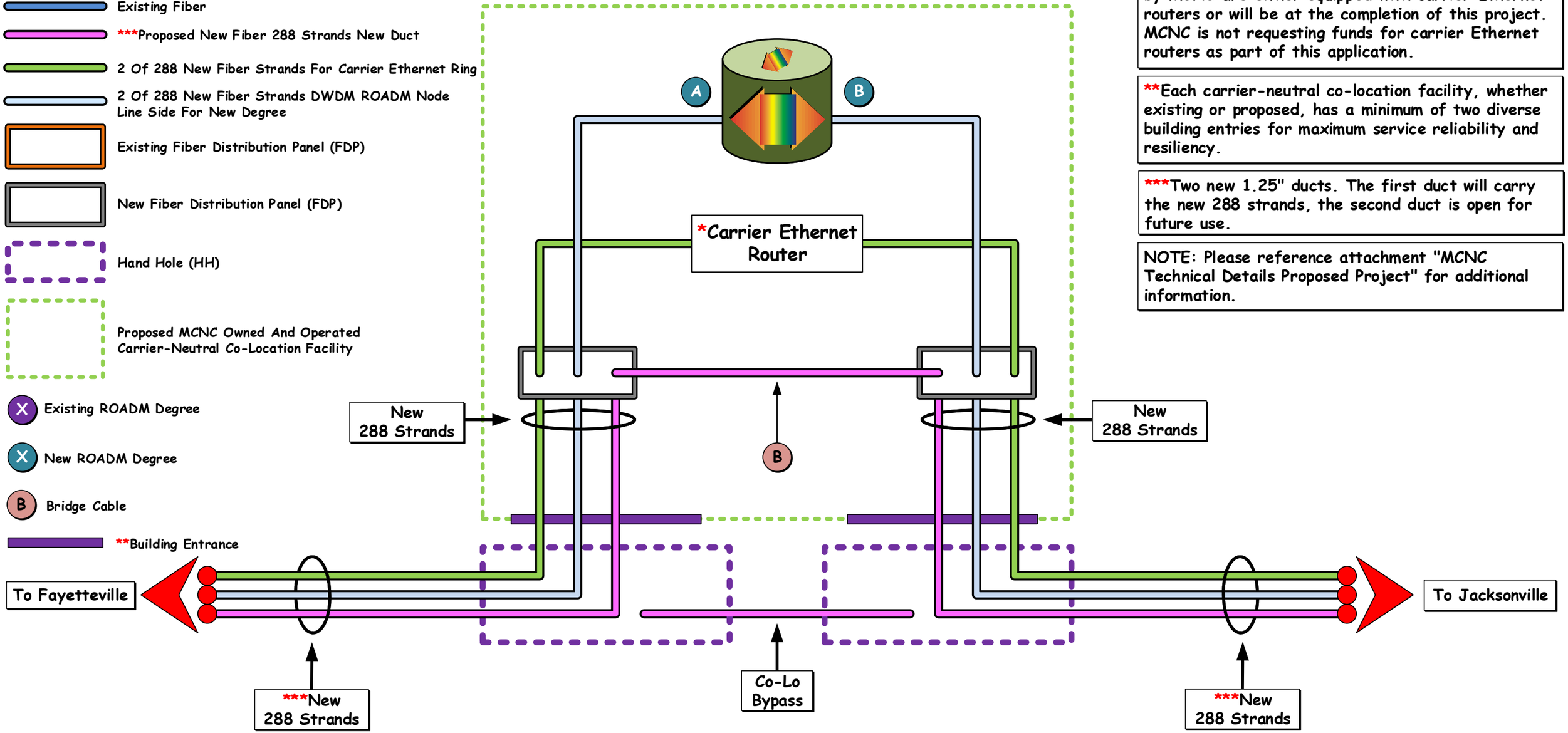

*All of MCNC's owned and operated carrier-neutral co-location facilities (existing and proposed) where transport to e.g., third party ISPs can be provided by MCNC are either equipped with carrier Ethernet routers or will be at the completion of this project. MCNC is not requesting funds for carrier Ethernet routers as part of this application.

**Each carrier-neutral co-location facility, whether existing or proposed, has a minimum of two diverse building entries for maximum service reliability and resiliency.

***Two new 1.25" ducts. The first duct will carry the new 288 strands, the second duct is open for future use.

NOTE: Please reference attachment "MCNC Technical Details Proposed Project" for additional information.

Drawing/System ID: Clint Co-Lo Dtl Tabloid	
Created By : Matt Valenzisi	Date/Time: 07/29/2022 17:56:56
Revised By : Matt Valenzisi	Date/Time: 09/18/2022 19:16:48
Reviewed By: Jeremy Geelen	Date/Time: 09/18/2022 19:16:48
Last Printed Date/Time: 09/18/2022 19:16:48	

File Name: MCNC Logical Network Diagrams

!!! MCNC CONFIDENTIAL !!!
!!! Do NOT Distribute !!!

Key:

- Proposed Upfit Existing 2-Degree Or Multi-Degree ROADM
- Existing Fiber
- ***Proposed New Fiber 288 Strands New Duct
- 2 Of 288 New Fiber Strands For Carrier Ethernet Ring
- 2 Of 288 New Fiber Strands DWDM ROADM Node Line Side For New Degree
- Existing Fiber Distribution Panel (FDP)
- New Fiber Distribution Panel (FDP)
- Hand Hole (HH)
- Existing MCNC Owned And Operated Carrier-Neutral Co-Location Facility
- X Existing ROADM Degree
- X New ROADM Degree
- B Bridge Cable
- **Building Entrance

Jacksonville Co-Location Detail
Coastal Carolina CC

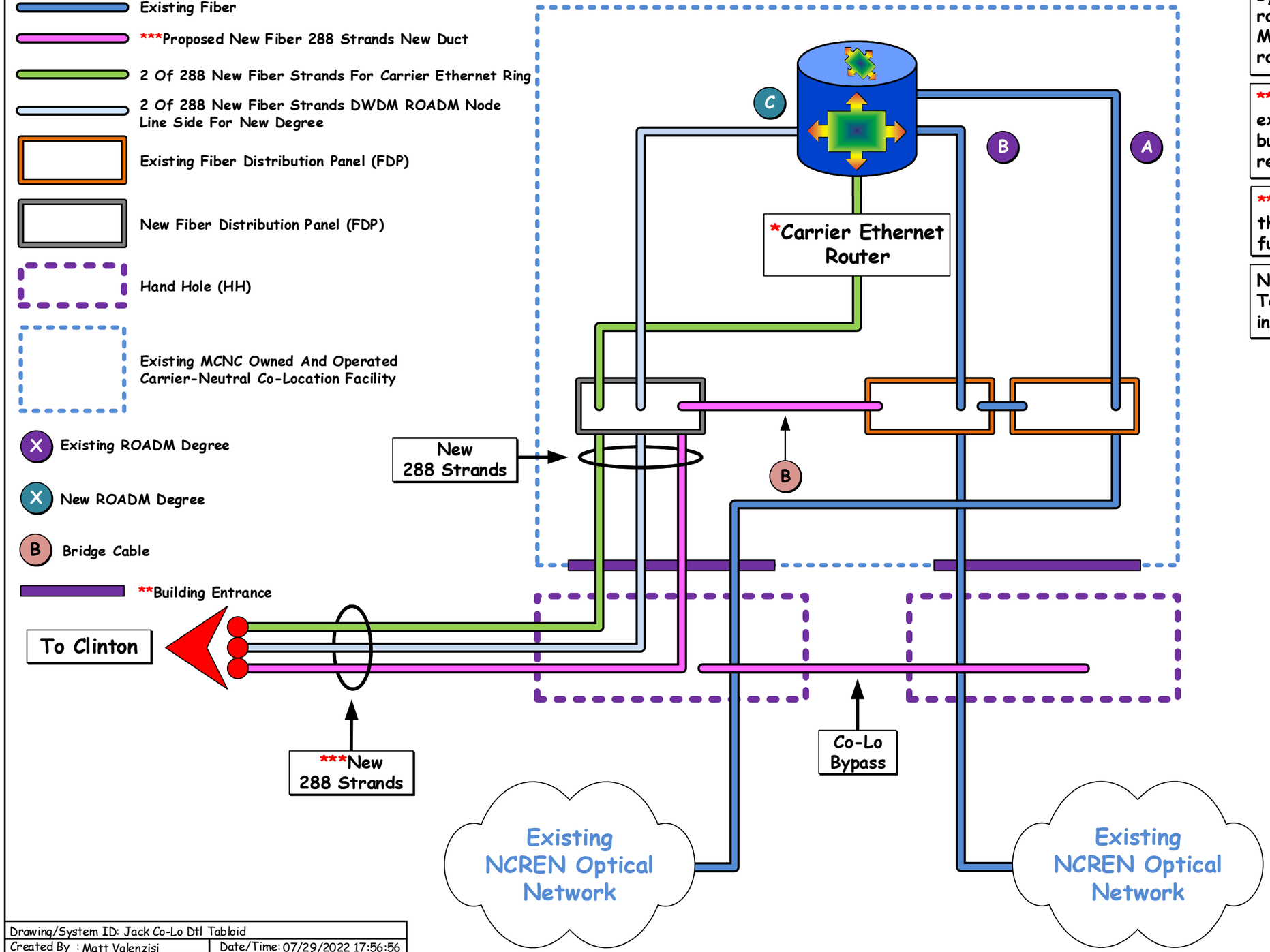

*All of MCNC's owned and operated carrier-neutral co-location facilities (existing and proposed) where transport to e.g., third party ISPs can be provided by MCNC are either equipped with carrier Ethernet routers or will be at the completion of this project. MCNC is not requesting funds for carrier Ethernet routers as part of this application.

**Each carrier-neutral co-location facility, whether existing or proposed, has a minimum of two diverse building entries for maximum service reliability and resiliency.

***Two new 1.25" ducts. The first duct will carry the new 288 strands, the second duct is open for future use.

NOTE: Please reference attachment "MCNC Technical Details Proposed Project" for additional information.

Drawing/System ID: Jack Co-Lo Dtl Tabloid	
Created By : Matt Valenzisi	Date/Time: 07/29/2022 17:56:56
Revised By : Matt Valenzisi	Date/Time: 09/18/2022 19:16:48
Reviewed By: Jeremy Geelen	Date/Time: 09/18/2022 19:16:48
Last Printed Date/Time: 09/18/2022 19:16:48	

File Name: MCNC Logical Network Diagrams

!!! MCNC CONFIDENTIAL !!!
!!! Do NOT Distribute !!!

High Level DWDM-Based Optical Network Segments Over Proposed Middle Mile Fiber Route: Winston-Salem To Albemarle

Key:

- Proposed Upfit Of Existing 2-Degree Or Multi-Degree ROADM
- Proposed New 2-Degree ROADM
- Existing Fiber
- Span Under Construction
- ****Proposed New Fiber - 288 Strands In New Duct
- Existing MCNC Owned And Operated Carrier-Neutral Co-Location Facility
- Proposed MCNC Owned And Operated Carrier-Neutral Co-Location Facility
- *****Existing Leased Co-Location Facility
- CE RTR ***Carrier Ethernet Router

①- Internet2, RTP, NC, 200G
②- Tier 1 ISP A, RTP, NC, 100G
③- Tier 1 ISP B, RTP, NC, 100G
④- Tier 1 ISP C, Winston-Salem, NC, 100G
⑤- Tier 1 ISP B, Winston-Salem, NC, 100G
⑥- Tier 1 ISP A, Huntersville, NC, 100G
⑦- Tier 1 ISP C, Huntersville, NC, 100G (CY22H2)
⑧- Tier 1 ISP D, Huntersville, NC, 20G
⑨- Internet2, Huntersville, NC, 200G

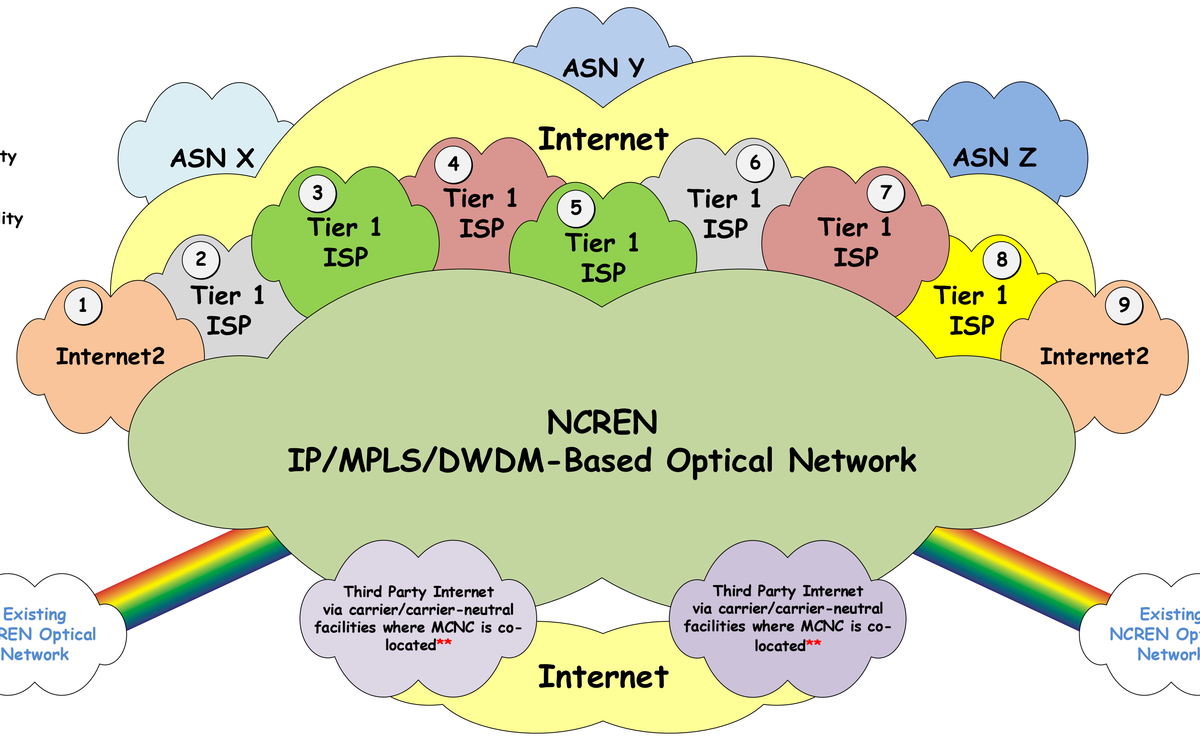

MCNC connectivity services (10G and 100G Layer 1 Transparent Lambda-based (with Ethernet handoffs) and/or MPLS-based Layer 2 Ethernet Transport 10M to 10G and/or Internet 10M to 100G) will be delivered along the proposed middle mile fiber routes at existing and proposed MCNC owned and operated carrier-neutral co-location facilities located at various points on the fiber routes as shown in this diagram. All of the services outlined in attachment "MCNC Proposed Service Offerings" will be available across all segments of the proposed middle mile fiber routes unless otherwise noted.

*MCNC Internet Connectivity Service (IPv4/v6 BGP peering to NCREN) is available at these locations via backhaul to NCREN's three major Internet peering locations in RTP, Winston-Salem and Huntersville.

**Peering directly to third party Internet Service Providers (ISPs) via MCNC Layer 1 and Layer 2 transport is also available at multiple locations in the RTP/Raleigh/Durham, NC Metro Area, Charlotte, NC Metro Area, and the Greensboro, NC Metro Area.

***All of MCNC's owned and operated carrier-neutral co-location facilities as well as the facilities mentioned in the diagram where transport to e.g., third party ISPs can be provided by MCNC are either equipped with carrier Ethernet routers or will be at the completion of this project. This includes the proposed co-location facility on the proposed middle mile fiber route depicted in this diagram. MCNC is not requesting funds for carrier Ethernet routers as part of this application.

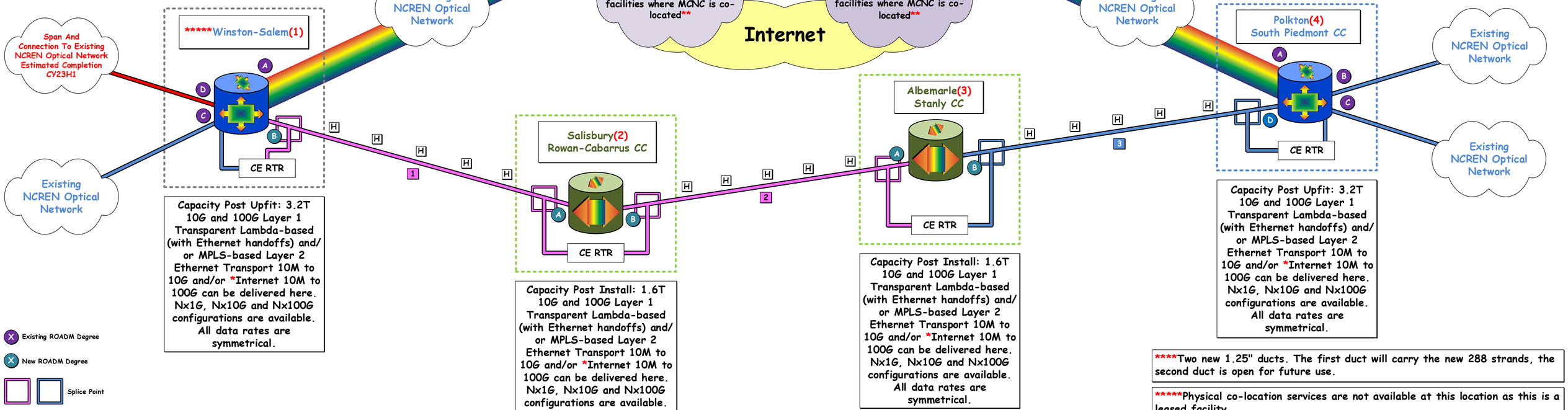

Capacity Post Upfit: 3.2T 10G and 100G Layer 1 Transparent Lambda-based (with Ethernet handoffs) and/ or MPLS-based Layer 2 Ethernet Transport 10M to 10G and/or *Internet 10M to 100G can be delivered here. Nx1G, Nx10G and Nx100G configurations are available. All data rates are symmetrical.

Capacity Post Install: 1.6T 10G and 100G Layer 1 Transparent Lambda-based (with Ethernet handoffs) and/ or MPLS-based Layer 2 Ethernet Transport 10M to 10G and/or *Internet 10M to 100G can be delivered here. Nx1G, Nx10G and Nx100G configurations are available. All data rates are symmetrical.

Capacity Post Install: 1.6T 10G and 100G Layer 1 Transparent Lambda-based (with Ethernet handoffs) and/ or MPLS-based Layer 2 Ethernet Transport 10M to 10G and/or *Internet 10M to 100G can be delivered here. Nx1G, Nx10G and Nx100G configurations are available. All data rates are symmetrical.

Capacity Post Upfit: 3.2T 10G and 100G Layer 1 Transparent Lambda-based (with Ethernet handoffs) and/ or MPLS-based Layer 2 Ethernet Transport 10M to 10G and/or *Internet 10M to 100G can be delivered here. Nx1G, Nx10G and Nx100G configurations are available. All data rates are symmetrical.

- Existing ROADM Degree
- New ROADM Degree
- Splice Point

Hand Holes (HH) will be placed approximately 2,500' apart and strategically closer in more populated areas along the proposed fiber route.

(1) - See Page 9 "Winston-Salem Co-Location Detail"
(2) - See Page 10 "Salisbury Co-Location Detail"
(3) - See Page 11 "Albemarle Co-Location Detail"
(4) - See Page 12 "Polkton Co-Location Detail"

****Two new 1.25" ducts. The first duct will carry the new 288 strands, the second duct is open for future use.

*****Physical co-location services are not available at this location as this is a leased facility.

The proposed middle mile fiber routes will be built underground, using new fiber and new ducts unless otherwise noted.

1 - Winston-Salem To Salisbury *NEW* ~213,576ft/~65.10km/~40.45miles
2 - Salisbury To Albemarle *NEW* ~173,331ft/~52.95km/~32.90miles
3 - Albemarle To Polkton *EXISTING* ~310,358ft/~94.60km/~58.78miles

NOTE: Please reference attachment "MCNC Technical Details Proposed Project" for additional information.

Drawing/System ID: NCREN WSALB Optical HL D Size	
Created By : Matt Valenzisi	Date/Time: 07/18/2022 23:31:30
Revised By : Matt Valenzisi	Date/Time: 09/18/2022 19:16:48
Reviewed By: Jeremy Geelen	Date/Time: 09/18/2022 19:16:48
Last Printed Date/Time: 09/18/2022 19:16:48	

File Name: MCNC Logical Network Diagrams

!!! MCNC CONFIDENTIAL !!!
!!! Do NOT Distribute !!!

Winston-Salem Co-Location Detail

Key:

- Proposed Upfit Existing 2-Degree Or Multi-Degree ROADM
- Existing Fiber
- Fiber Plant Currently Under Construction
- ***Proposed New Fiber 288 Strands New Duct
- 2 Of 288 New Fiber Strands For Carrier Ethernet Ring
- 2 Of 288 New Fiber Strands DWDM ROADM Node Line Side For New Degree
- Existing Fiber Distribution Panel (FDP)
- New Fiber Distribution Panel (FDP)
- Hand Hole (HH)
- Existing Leased Co-Location Facility
- X Existing ROADM Degree
- X New ROADM Degree
- B Bridge Cable
- **Building Entrance

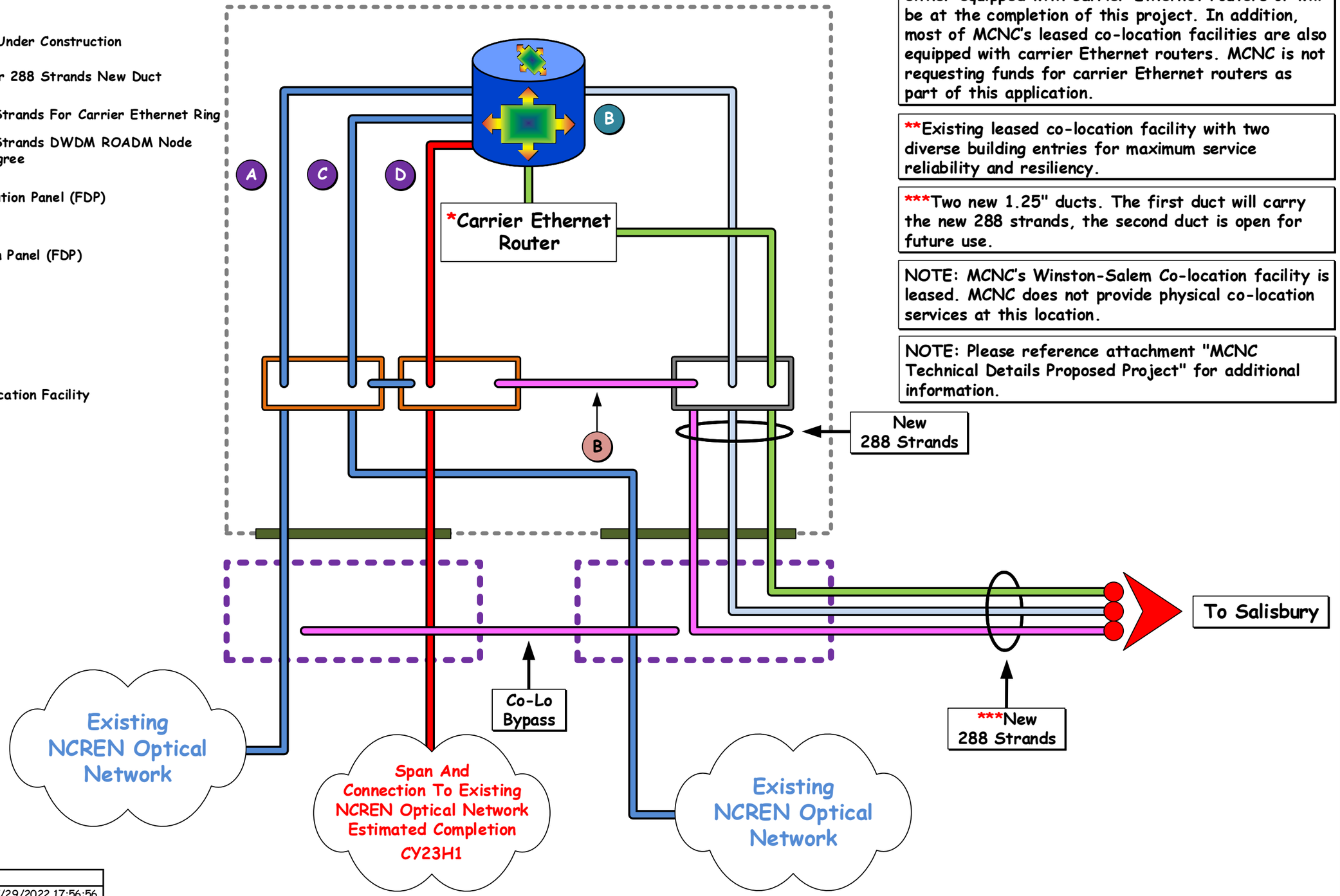

*All of MCNC's owned and operated co-location facilities (existing and proposed) where transport to e.g., third party ISPs can be provided by MCNC are either equipped with carrier Ethernet routers or will be at the completion of this project. In addition, most of MCNC's leased co-location facilities are also equipped with carrier Ethernet routers. MCNC is not requesting funds for carrier Ethernet routers as part of this application.

**Existing leased co-location facility with two diverse building entries for maximum service reliability and resiliency.

***Two new 1.25" ducts. The first duct will carry the new 288 strands, the second duct is open for future use.

NOTE: MCNC's Winston-Salem Co-location facility is leased. MCNC does not provide physical co-location services at this location.

NOTE: Please reference attachment "MCNC Technical Details Proposed Project" for additional information.

Drawing/System ID: WS Co-Lo Dtl Tabloid	
Created By : Matt Valenzisi	Date/Time: 07/29/2022 17:56:56
Revised By : Matt Valenzisi	Date/Time: 09/18/2022 19:16:48
Reviewed By: Jeremy Geelen	Date/Time: 09/18/2022 19:16:48
Last Printed Date/Time: 09/18/2022 19:16:48	

File Name: MCNC Logical Network Diagrams

!!! MCNC CONFIDENTIAL !!!
!!! Do NOT Distribute !!!

Salisbury Co-Location Detail Rowan-Cabarrus CC

Key:

- Proposed New 2-Degree ROADM
- Existing Fiber
- ***Proposed New Fiber 288 Strands New Duct
- 2 Of 288 New Fiber Strands For Carrier Ethernet Ring
- 2 Of 288 New Fiber Strands DWDM ROADM Node Line Side For New Degree
- Existing Fiber Distribution Panel (FDP)
- New Fiber Distribution Panel (FDP)
- Hand Hole (HH)
- Proposed MCNC Owned And Operated Carrier-Neutral Co-Location Facility
- X Existing ROADM Degree
- X New ROADM Degree
- B Bridge Cable
- **Building Entrance

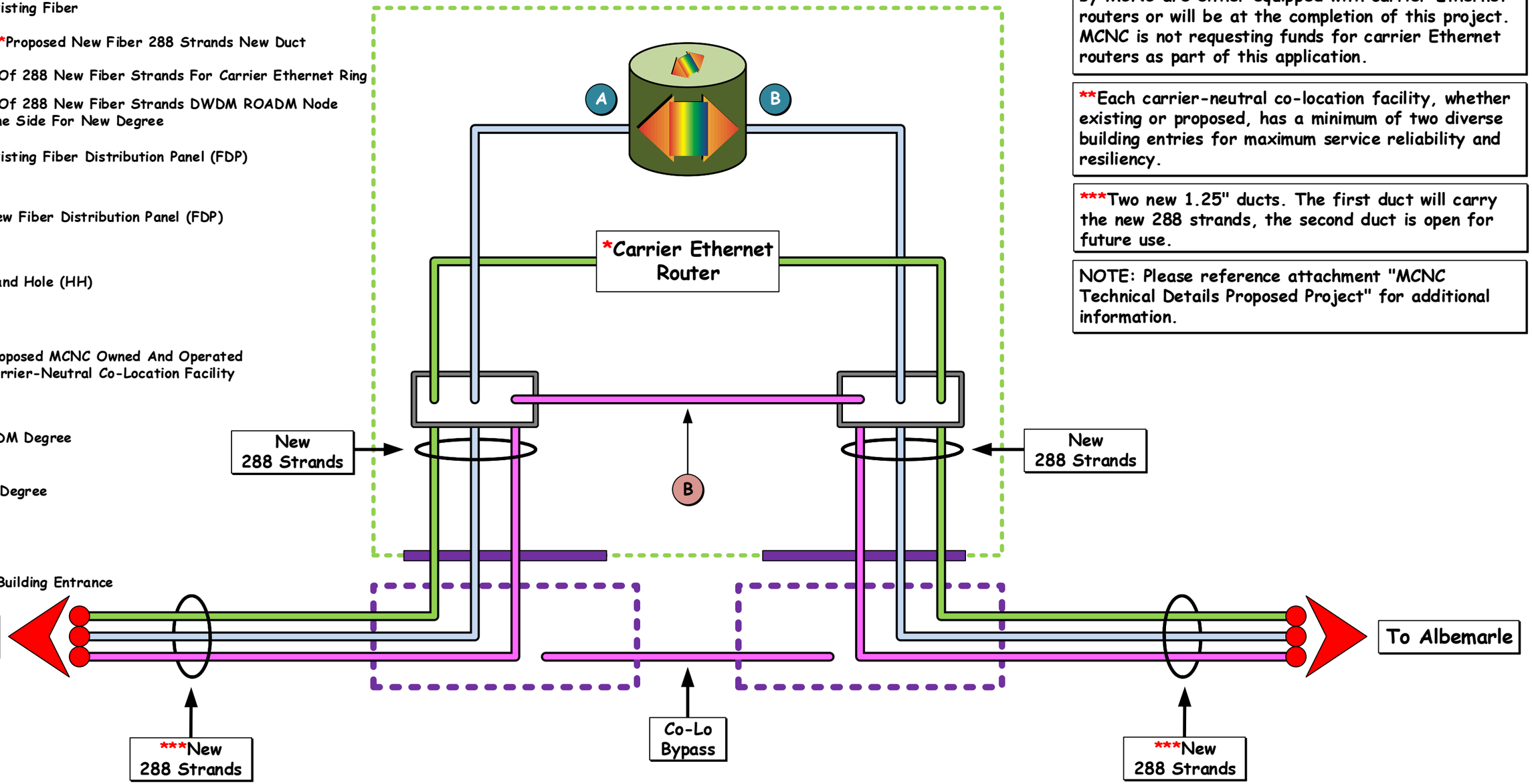

*All of MCNC's owned and operated carrier-neutral co-location facilities (existing and proposed) where transport to e.g., third party ISPs can be provided by MCNC are either equipped with carrier Ethernet routers or will be at the completion of this project. MCNC is not requesting funds for carrier Ethernet routers as part of this application.

**Each carrier-neutral co-location facility, whether existing or proposed, has a minimum of two diverse building entries for maximum service reliability and resiliency.

***Two new 1.25" ducts. The first duct will carry the new 288 strands, the second duct is open for future use.

NOTE: Please reference attachment "MCNC Technical Details Proposed Project" for additional information.

Drawing/System ID: Sal Co-Lo Dtl Tabloid	
Created By : Matt Valenzisi	Date/Time: 07/29/2022 17:56:56
Revised By : Matt Valenzisi	Date/Time: 09/18/2022 19:16:48
Reviewed By: Jeremy Geelen	Date/Time: 09/18/2022 19:16:48
Last Printed Date/Time: 09/18/2022 19:16:48	

File Name: MCNC Logical Network Diagrams

!!! MCNC CONFIDENTIAL !!!
!!! Do NOT Distribute !!!

Albemarle Co-Location Detail Stanly CC

Key:

- Proposed New 2-Degree ROADM
- Existing Fiber
- ***Proposed New Fiber 288 Strands New Duct
- 2 Of 288 New Fiber Strands For Carrier Ethernet Ring
- 2 Of 288 New Fiber Strands DWDM ROADM Node Line Side For New Degree
- 2 Existing Fiber Strands DWDM ROADM Node Line Side For New Degree
- Existing Fiber Distribution Panel (FDP)
- New Fiber Distribution Panel (FDP)
- Hand Hole (HH)
- Proposed MCNC Owned And Operated Carrier-Neutral Colocation Facility

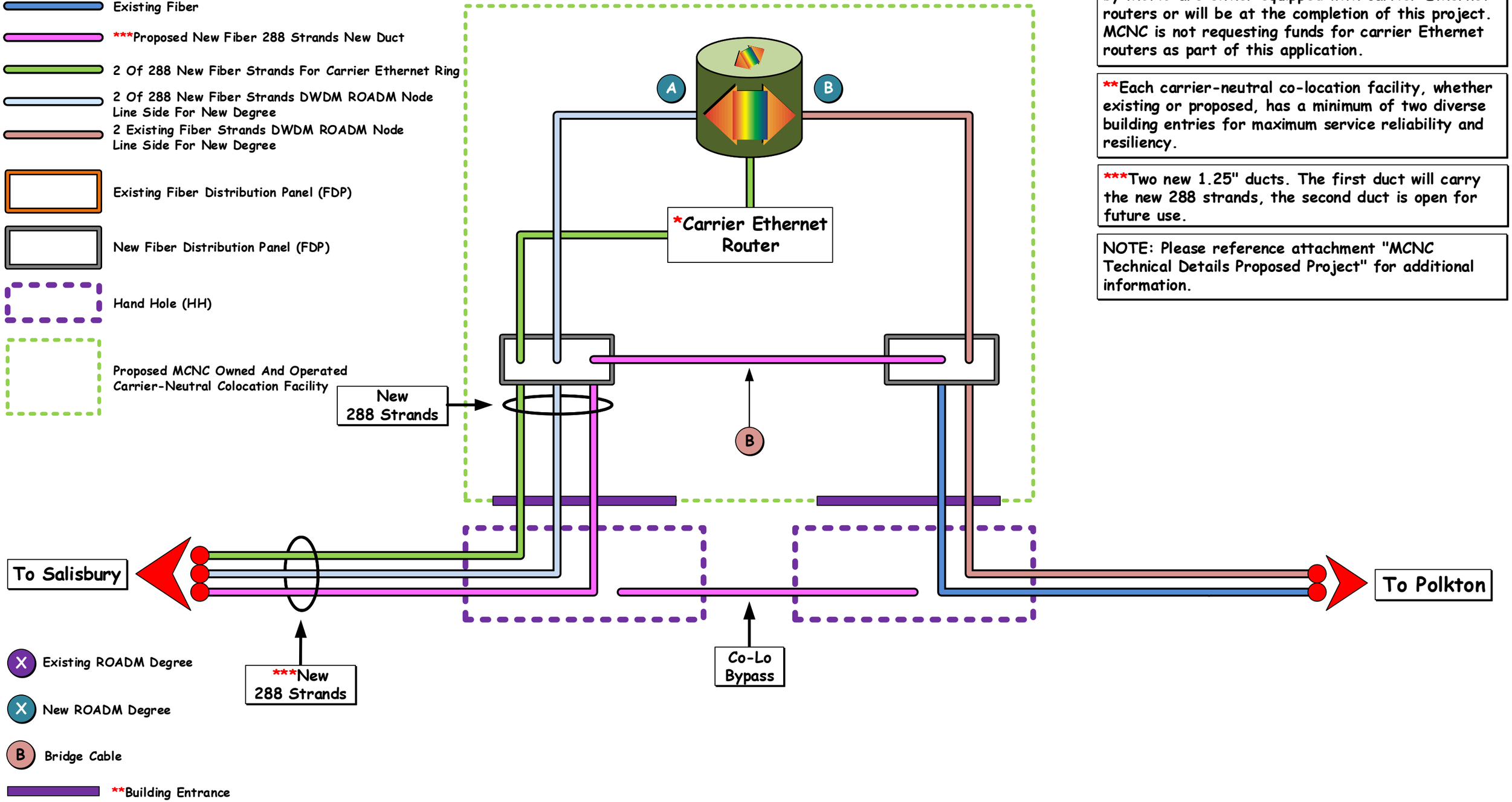

- Existing ROADM Degree
- New ROADM Degree
- Bridge Cable
- **Building Entrance

*All of MCNC's owned and operated carrier-neutral co-location facilities (existing and proposed) where transport to e.g., third party ISPs can be provided by MCNC are either equipped with carrier Ethernet routers or will be at the completion of this project. MCNC is not requesting funds for carrier Ethernet routers as part of this application.

**Each carrier-neutral co-location facility, whether existing or proposed, has a minimum of two diverse building entries for maximum service reliability and resiliency.

***Two new 1.25" ducts. The first duct will carry the new 288 strands, the second duct is open for future use.

NOTE: Please reference attachment "MCNC Technical Details Proposed Project" for additional information.

Drawing/System ID: Alb Co-Lo Dtl Tabloid	
Created By : Matt Valenzisi	Date/Time: 07/29/2022 17:56:56
Revised By : Matt Valenzisi	Date/Time:09/18/2022 19:16:48
Reviewed By: Jeremy Geelen	Date/Time:09/18/2022 19:16:48
Last Printed Date/Time: 09/18/2022 19:16:48	

File Name: MCNC Logical Network Diagrams

!!! MCNC CONFIDENTIAL !!!
!!! Do NOT Distribute !!!

Key:

- Proposed Upfit Existing 2-Degree Or Multi-Degree ROADM
- Existing Fiber
- 2 Existing Fiber Strands For Carrier Ethernet Ring
- 2 Existing Fiber Strands DWDM ROADM Node Line Side For New Degree
- Existing Fiber Distribution Panel (FDP)
- Hand Hole (HH)
- Existing MCNC Owned And Operated Carrier-Neutral Co-Location Facility
- X Existing ROADM Degree
- X New ROADM Degree
- B Bridge Cable
- **Building Entrance

Polkton Co-Location Detail South Piedmont CC

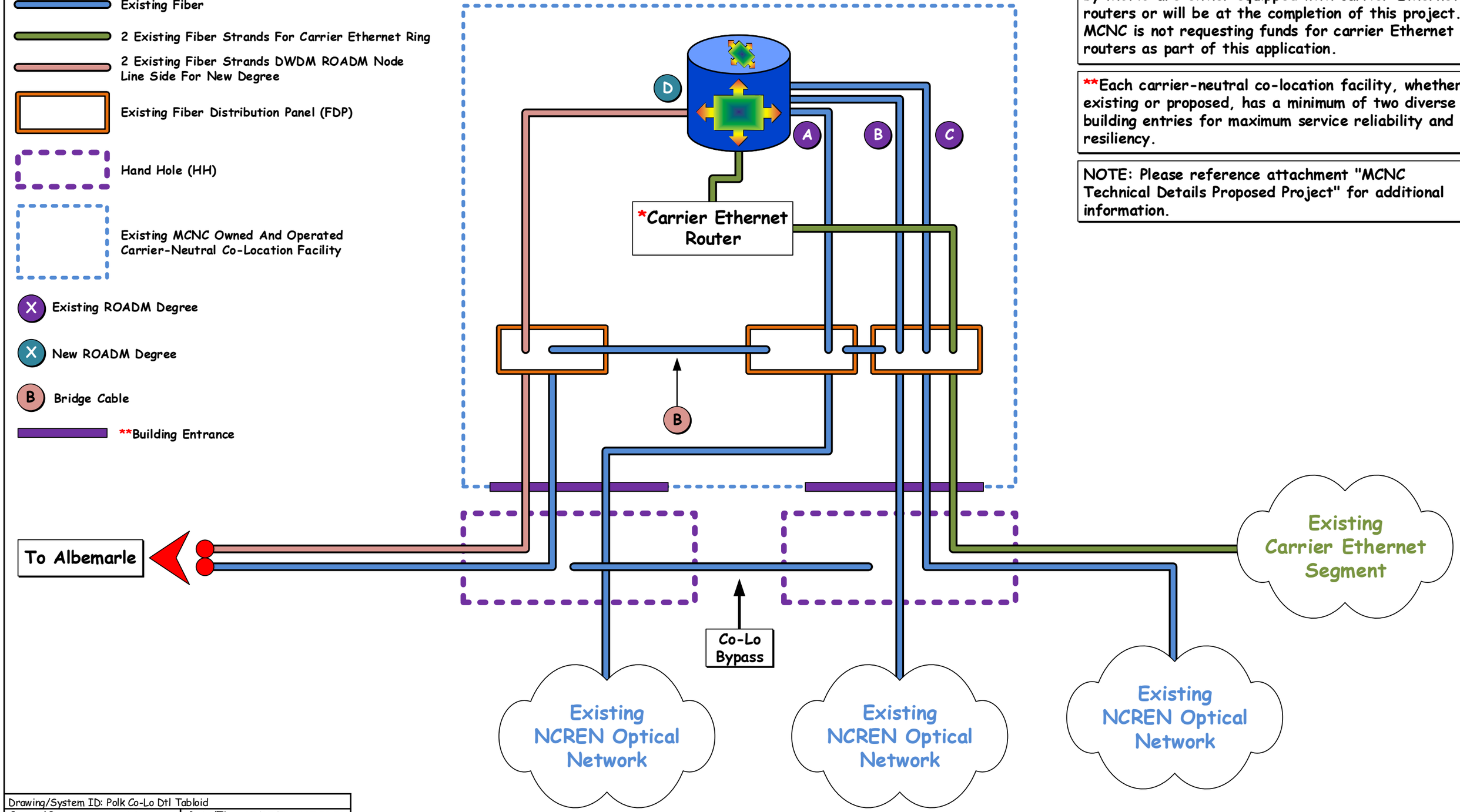

*All of MCNC's owned and operated carrier-neutral co-location facilities (existing and proposed) where transport to e.g., third party ISPs can be provided by MCNC are either equipped with carrier Ethernet routers or will be at the completion of this project. MCNC is not requesting funds for carrier Ethernet routers as part of this application.

**Each carrier-neutral co-location facility, whether existing or proposed, has a minimum of two diverse building entries for maximum service reliability and resiliency.

NOTE: Please reference attachment "MCNC Technical Details Proposed Project" for additional information.

Drawing/System ID: Polk Co-Lo Dtl Tabloid	
Created By : Matt Valenzisi	Date/Time: 07/29/2022 17:56:56
Revised By : Matt Valenzisi	Date/Time: 09/18/2022 19:16:48
Reviewed By: Jeremy Geelen	Date/Time: 09/18/2022 19:16:48
Last Printed Date/Time: 09/18/2022 19:16:48	

File Name: MCNC Logical Network Diagrams

!!! MCNC CONFIDENTIAL !!!
!!! Do NOT Distribute !!!

Service Model Example 1: Commercial Last Mile Residential Service Provider Internet Access

Key:

- Proposed Upfit Existing 2-Degree Or Multi-Degree ROADM
- Proposed New 2-Degree ROADM
- Existing Fiber
- Proposed New Fiber 288 Strands In One Of Two New 1.25" Ducts
- DWDM Line (Carries Lambda, IP and MPLS-based services (E-LINE/E-LAN, EVPL))
- Co-lo Customer — Co-location customer's network equipment
- CE RTR — *Carrier Ethernet Router
- 2 Strands Fiber DWDM-Line, 2 Strands Fiber Carrier Ethernet Node-To-Node Interconnects
- Splice Point
- Fiber Distribution Panels (FDPs)
- Existing MCNC Carrier-Neutral Co-Location Facility
- Proposed MCNC Carrier-Neutral Co-Location Facility
- Hand Holes (HHs)

Hand Holes (HH) will be placed approximately 2,500' apart and strategically closer in more populated areas along the proposed fiber route.

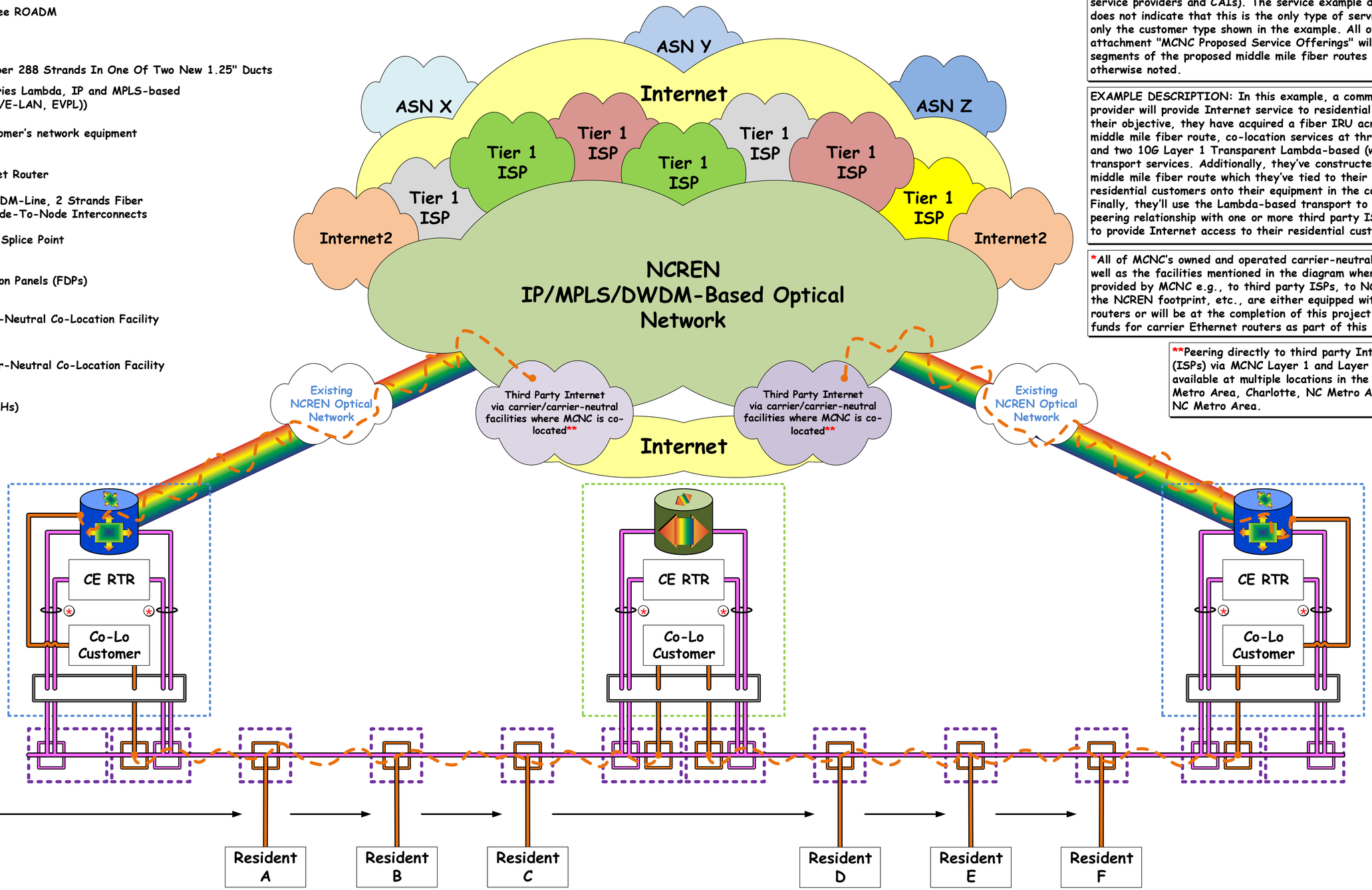

Laterals built and funded by last mile residential service providers and/or, middle mile service providers and/or by MCNC

Example: Lateral Build, IRU/Lease with Co-Lo Service and Diverse Layer 1 Transparent Lambda-based (with Ethernet handoffs) Transport For third Party Internet Connectivity

NOTE: This diagram depicts two of three optical DWDM-based network segments on the proposed middle mile fiber routes along with a specific example of the types of network connectivity services that will be available to MCNC customers (e.g., last mile residential service providers, middle mile service providers and CAIs). The service example depicted in this diagram does not indicate that this is the only type of service that is available to only the customer type shown in the example. All of the services outlined in attachment "MCNC Proposed Service Offerings" will be available across all segments of the proposed middle mile fiber routes to all customers unless otherwise noted.

EXAMPLE DESCRIPTION: In this example, a commercial last mile service provider will provide Internet service to residential customers. To achieve their objective, they have acquired a fiber IRU across two segments of a middle mile fiber route, co-location services at three co-location facilities and two 10G Layer 1 Transparent Lambda-based (with Ethernet handoffs) transport services. Additionally, they've constructed fiber laterals off the middle mile fiber route which they've tied to their IRU to aggregate their residential customers onto their equipment in the co-locations facilities. Finally, they'll use the Lambda-based transport to facilitate their BGP peering relationship with one or more third party ISPs which will allow them to provide Internet access to their residential customers.

*All of MCNC's owned and operated carrier-neutral co-location facilities as well as the facilities mentioned in the diagram where transport can be provided by MCNC e.g., to third party ISPs, to NCREN, between sites on the NCREN footprint, etc., are either equipped with carrier Ethernet routers or will be at the completion of this project. MCNC is not requesting funds for carrier Ethernet routers as part of this application.

**Peering directly to third party Internet Service Providers (ISPs) via MCNC Layer 1 and Layer 2 transport is also available at multiple locations in the RTP/Raleigh/Durham, NC Metro Area, Charlotte, NC Metro Area, and the Greensboro, NC Metro Area.

A variety of Institute of Electrical and Electronics Engineers (IEEE) compliant copper and optical (SMF and MMF) customer handoffs are available to accommodate 10M through 100G services e.g., 1000Base-T, 10GBase-SR, 10GBase-LR, 100GBase-LR4, etc.

NOTE: Please reference attachment "MCNC Technical Details Proposed Project" for additional information.

Drawing/System ID: HL Ex. Srv Mod-1	
Created By : Matt Valenzisi	Date/Time: 07/18/2022 23:31:30
Revised By : Matt Valenzisi	Date/Time: 09/18/2022 19:16:48
Reviewed By: Jeremy Geelen	Date/Time: 09/18/2022 19:16:48
Last Printed Date/Time: 09/18/2022 19:16:48	

File Name: MCNC Logical Network Diagrams

!!! MCNC CONFIDENTIAL !!!
!!! Do NOT Distribute !!!

Service Model Example 2: Nonprofit Last Mile Residential Service Provider Internet Access

Key:

- Proposed Upfit Existing 2-Degree Or Multi-Degree ROADM
- Proposed New 2-Degree ROADM
- Existing Fiber
- Proposed New Fiber 288 Strands In One Of Two New 1.25" Ducts
- DWDM Line (Carries Lambda, IP and MPLS-based services (E-LINE/E-LAN, EVPL))
- Co-lo Customer — Co-location customer's network equipment
- CE RTR — *Carrier Ethernet Router
- 2 Strands Fiber DWDM-Line, 2 Strands Fiber Carrier Ethernet Node-To-Node Interconnects
- Splice Point
- Fiber Distribution Panels (FDPs)
- Existing MCNC Carrier-Neutral Co-Location Facility
- Proposed MCNC Carrier-Neutral Co-Location Facility
- Hand Holes (HHs)

Hand Holes (HH) will be placed approximately 2,500' apart and strategically closer in more populated areas along the proposed fiber route.

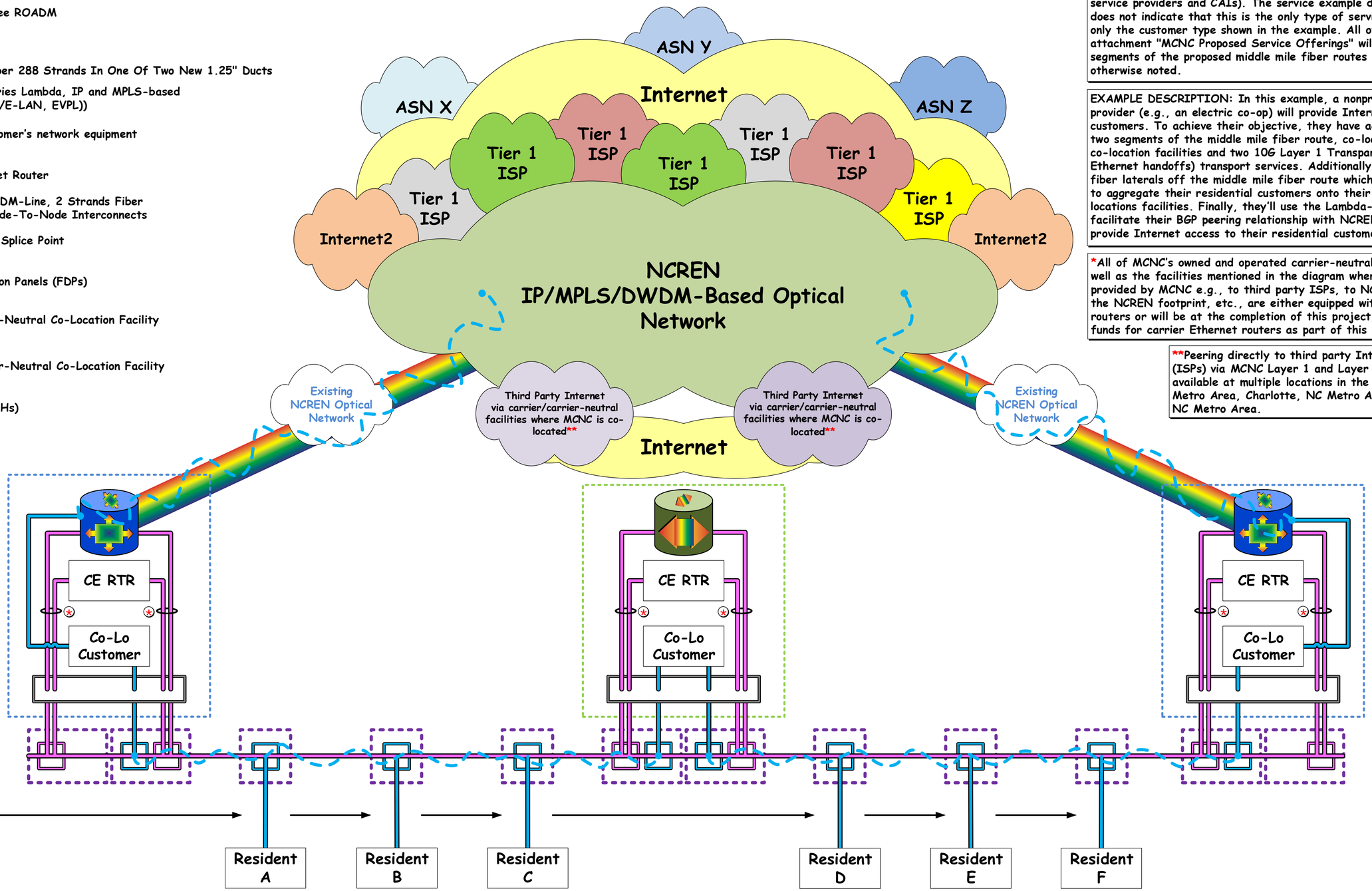

Laterals built and funded by last mile residential service providers and/or, middle mile service providers and/or by MCNC

Example: Lateral Build, IRU/Lease with Co-Lo Service and Diverse Layer 1 Transparent Lambda-based (with Ethernet handoffs) Transport For MCNC Internet Connectivity

NOTE: This diagram depicts two of three optical DWDM-based network segments on the proposed middle mile fiber routes along with a specific example of the types of network connectivity services that will be available to MCNC customers (e.g., last mile residential service providers, middle mile service providers and CAIs). The service example depicted in this diagram does not indicate that this is the only type of service that is available to only the customer type shown in the example. All of the services outlined in attachment "MCNC Proposed Service Offerings" will be available across all segments of the proposed middle mile fiber routes to all customers unless otherwise noted.

EXAMPLE DESCRIPTION: In this example, a nonprofit last mile service provider (e.g., an electric co-op) will provide Internet service to residential customers. To achieve their objective, they have acquired a fiber IRU across two segments of the middle mile fiber route, co-location services at three co-location facilities and two 10G Layer 1 Transparent Lambda-based (with Ethernet handoffs) transport services. Additionally, they've constructed fiber laterals off the middle mile fiber route which they've tied to their IRU to aggregate their residential customers onto their equipment in the co-locations facilities. Finally, they'll use the Lambda-based transport to facilitate their BGP peering relationship with NCREN which will allow them to provide Internet access to their residential customers.

*All of MCNC's owned and operated carrier-neutral co-location facilities as well as the facilities mentioned in the diagram where transport can be provided by MCNC e.g., to third party ISPs, to NCREN, between sites on the NCREN footprint, etc., are either equipped with carrier Ethernet routers or will be at the completion of this project. MCNC is not requesting funds for carrier Ethernet routers as part of this application.

**Peering directly to third party Internet Service Providers (ISPs) via MCNC Layer 1 and Layer 2 transport is also available at multiple locations in the RTP/Raleigh/Durham, NC Metro Area, Charlotte, NC Metro Area, and the Greensboro, NC Metro Area.

A variety of Institute of Electrical and Electronics Engineers (IEEE) compliant copper and optical (SMF and MMF) customer handoffs are available to accommodate 10M through 100G services e.g., 1000Base-T, 10GBase-SR, 10GBase-LR, 100GBase-LR4, etc.

NOTE: Please reference attachment "MCNC Technical Details Proposed Project" for additional information.

Drawing/System ID: HL Ex. Srv Mod-2	
Created By : Matt Valenzisi	Date/Time: 07/18/2022 23:31:30
Revised By : Matt Valenzisi	Date/Time: 09/18/2022 19:16:48
Reviewed By: Jeremy Geelen	Date/Time: 09/18/2022 19:16:48
Last Printed Date/Time: 09/18/2022 19:16:48	

File Name: MCNC Logical Network Diagrams

!!! MCNC CONFIDENTIAL !!!
!!! Do NOT Distribute !!!

Service Model Example 3: Nonprofit Last Mile Residential Service Provider Wireless Internet Access

Key:

- Proposed Upfit Existing 2-Degree Or Multi-Degree ROADM
- Proposed New 2-Degree ROADM
- Existing Fiber Plant
- Proposed New Fiber 288 Strands In One Of Two New 1.25" Ducts
- DWDM Line (Carries Lambda, IP and MPLS-based services (E-LINE/E-LAN, EVPL))
- Co-lo Customer — Co-location customer's network equipment
- CE RTR — *Carrier Ethernet Router
- 2 Strands Fiber DWDM-Line, 2 Strands Fiber Carrier Ethernet Node-To-Node Interconnects
- Splice Point
- Fiber Distribution Panels (FDPs)
- Existing MCNC Carrier-Neutral Co-Location Facility
- Proposed MCNC Carrier-Neutral Co-Location Facility
- Hand Holes (HHs)

Hand Holes (HH) will be placed approximately 2,500' apart and strategically closer in more populated areas along the proposed fiber route.

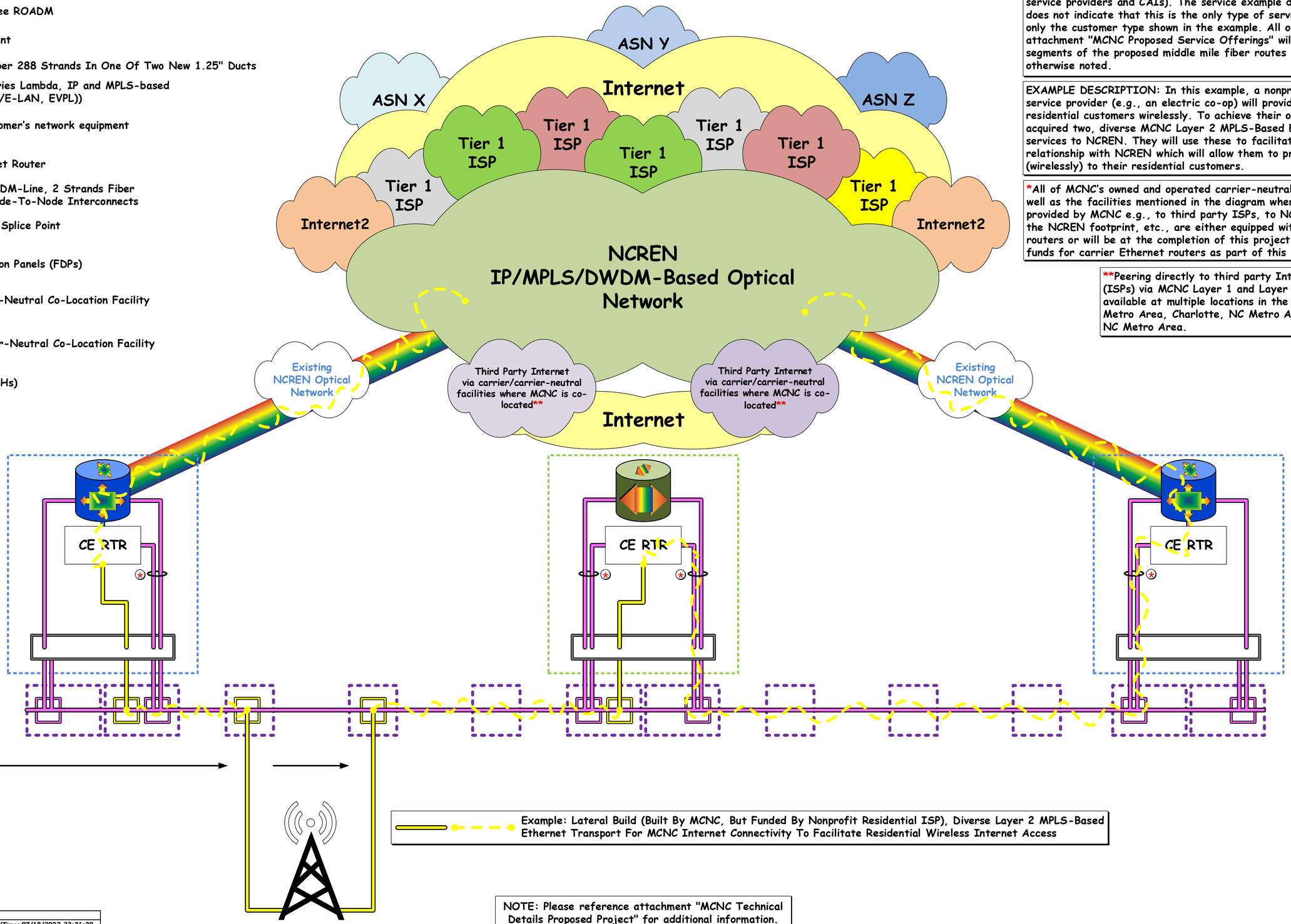

NOTE: This diagram depicts two of three optical DWDM-based network segments on the proposed middle mile fiber routes along with a specific example of the types of network connectivity services that will be available to MCNC customers (e.g., last mile residential service providers, middle mile service providers and CAIs). The service example depicted in this diagram does not indicate that this is the only type of service that is available to only the customer type shown in the example. All of the services outlined in attachment "MCNC Proposed Service Offerings" will be available across all segments of the proposed middle mile fiber routes to all customers unless otherwise noted.

EXAMPLE DESCRIPTION: In this example, a nonprofit residential last mile service provider (e.g., an electric co-op) will provide Internet service to residential customers wirelessly. To achieve their objective, they have acquired two, diverse MCNC Layer 2 MPLS-Based Ethernet transport services to NCREN. They will use these to facilitate their BGP peering relationship with NCREN which will allow them to provide Internet access (wirelessly) to their residential customers.

*All of MCNC's owned and operated carrier-neutral co-location facilities as well as the facilities mentioned in the diagram where transport can be provided by MCNC e.g., to third party ISPs, to NCREN, between sites on the NCREN footprint, etc., are either equipped with carrier Ethernet routers or will be at the completion of this project. MCNC is not requesting funds for carrier Ethernet routers as part of this application.

**Peering directly to third party Internet Service Providers (ISPs) via MCNC Layer 1 and Layer 2 transport is also available at multiple locations in the RTP/Raleigh/Durham, NC Metro Area, Charlotte, NC Metro Area, and the Greensboro, NC Metro Area.

A variety of Institute of Electrical and Electronics Engineers (IEEE) compliant copper and optical (SMF and MMF) customer handoffs are available to accommodate 10M through 100G services e.g., 1000Base-T, 10GBase-SR, 10GBase-LR, 100GBase-LR4, etc.

NOTE: Please reference attachment "MCNC Technical Details Proposed Project" for additional information.

File Name: MCNC Logical Network Diagrams

Drawing/System ID: HL Ex. Srv Mod-3	
Created By : Matt Valenzisi	Date/Time: 07/18/2022 23:31:30
Revised By : Matt Valenzisi	Date/Time: 09/18/2022 19:16:48
Reviewed By: Jeremy Geelen	Date/Time: 09/18/2022 19:16:48
Last Printed Date/Time: 09/18/2022 19:16:48	

!!! MCNC CONFIDENTIAL !!!
!!! Do NOT Distribute !!!

Service Model Example 4: Commercial Last Mile Residential Service Provider Wireless Internet Access

Key:

- Proposed Upfit Existing 2-Degree Or Multi-Degree ROADM
- Proposed New 2-Degree ROADM
- Existing Fiber Plant
- Proposed New Fiber 288 Strands In One Of Two New 1.25" Ducts
- DWDM Line (Carries Lambda, IP and MPLS-based services (E-LINE/E-LAN, EVPL))
- Co-lo Customer — Co-location customer's network equipment
- CE RTR — *Carrier Ethernet Router
- 2 Strands Fiber DWDM-Line, 2 Strands Fiber Carrier Ethernet Node-To-Node Interconnects
- Splice Point
- Fiber Distribution Panels (FDPs)
- Existing MCNC Carrier-Neutral Co-Location Facility
- Proposed MCNC Carrier-Neutral Co-Location Facility
- Hand Holes (HHs)

Hand Holes (HH) will be placed approximately 2,500' apart and strategically closer in more populated areas along the proposed fiber route.

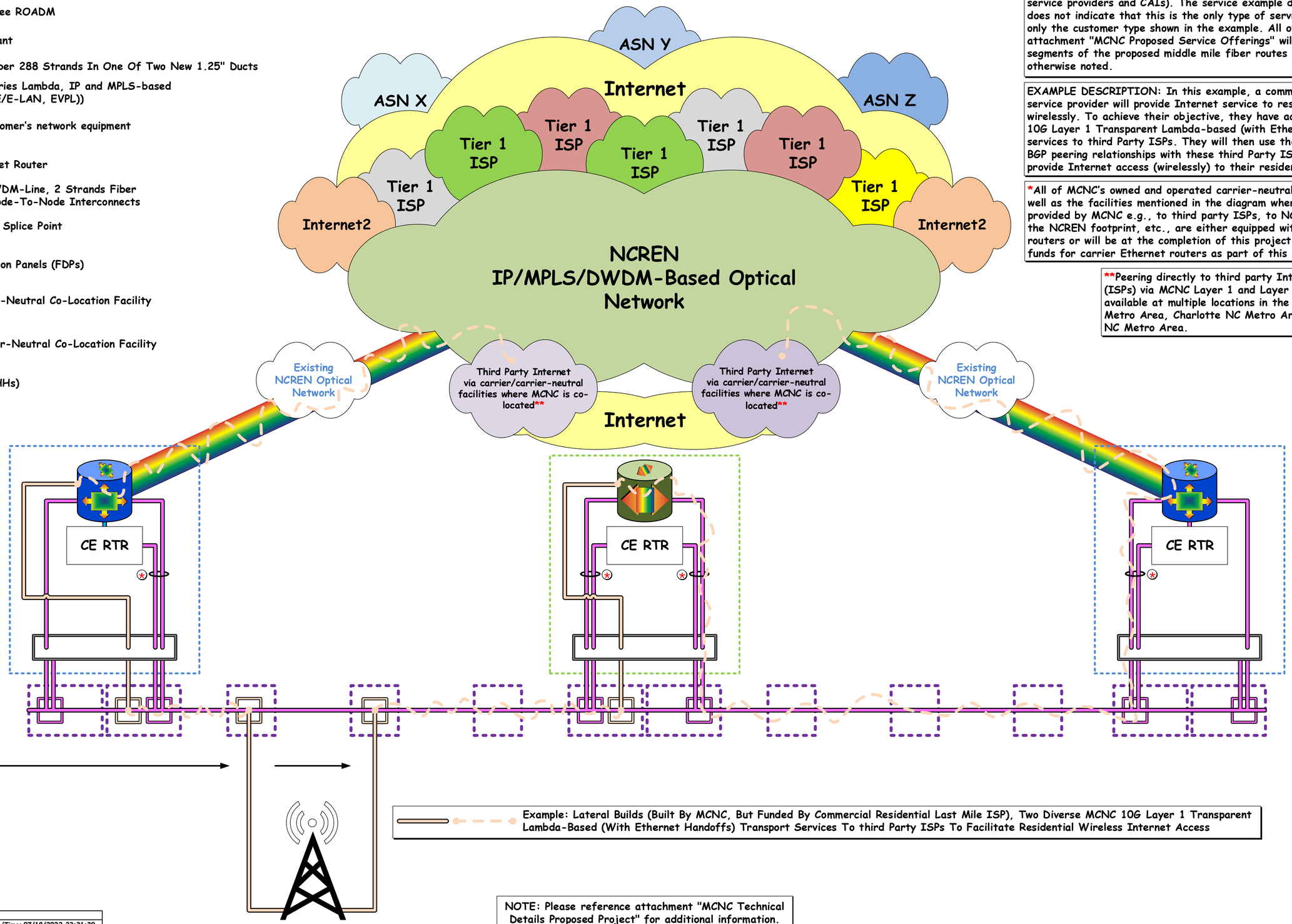

NOTE: This diagram depicts two of three optical DWDM-based network segments on the proposed middle mile fiber routes along with a specific example of the types of network connectivity services that will be available to MCNC customers (e.g., last mile residential service providers, middle mile service providers and CAIs). The service example depicted in this diagram does not indicate that this is the only type of service that is available to only the customer type shown in the example. All of the services outlined in attachment "MCNC Proposed Service Offerings" will be available across all segments of the proposed middle mile fiber routes to all customers unless otherwise noted.

EXAMPLE DESCRIPTION: In this example, a commercial last mile residential service provider will provide Internet service to residential customers wirelessly. To achieve their objective, they have acquired two diverse MCNC 10G Layer 1 Transparent Lambda-based (with Ethernet handoffs) transport services to third Party ISPs. They will then use these services to facilitate BGP peering relationships with these third Party ISPs allowing them to provide Internet access (wirelessly) to their residential customers.

*All of MCNC's owned and operated carrier-neutral co-location facilities as well as the facilities mentioned in the diagram where transport can be provided by MCNC e.g., to third party ISPs, to NCREN, between sites on the NCREN footprint, etc., are either equipped with carrier Ethernet routers or will be at the completion of this project. MCNC is not requesting funds for carrier Ethernet routers as part of this application.

**Peering directly to third party Internet Service Providers (ISPs) via MCNC Layer 1 and Layer 2 transport is also available at multiple locations in the RTP/Raleigh/Durham NC Metro Area, Charlotte NC Metro Area, and the Greensboro NC Metro Area.

A variety of Institute of Electrical and Electronics Engineers (IEEE) compliant copper and optical (SMF and MMF) customer handoffs are available to accommodate 10M through 100G services e.g., 1000Base-T, 10GBase-SR, 10GBase-LR, 100GBase-LR4, etc.

NOTE: Please reference attachment "MCNC Technical Details Proposed Project" for additional information.

File Name: MCNC Logical Network Diagrams

Drawing/System ID: HL Ex. Srv Mod-4	
Created By : Matt Valenzisi	Date/Time: 07/18/2022 23:31:30
Revised By : Matt Valenzisi	Date/Time: 09/18/2022 19:16:48
Reviewed By: Jeremy Geelen	Date/Time: 09/18/2022 19:16:48
Last Printed Date/Time: 09/18/2022 19:16:48	

!!! MCNC CONFIDENTIAL !!!
!!! Do NOT Distribute !!!

High Level Perspective Proposed Middle Mile Fiber Routes

Key:

- PE Major NCREN IPv4/IPv6 Peering Location
- PE Backbone IPv4/IPv6 Aggregation Router
- *PE * Future

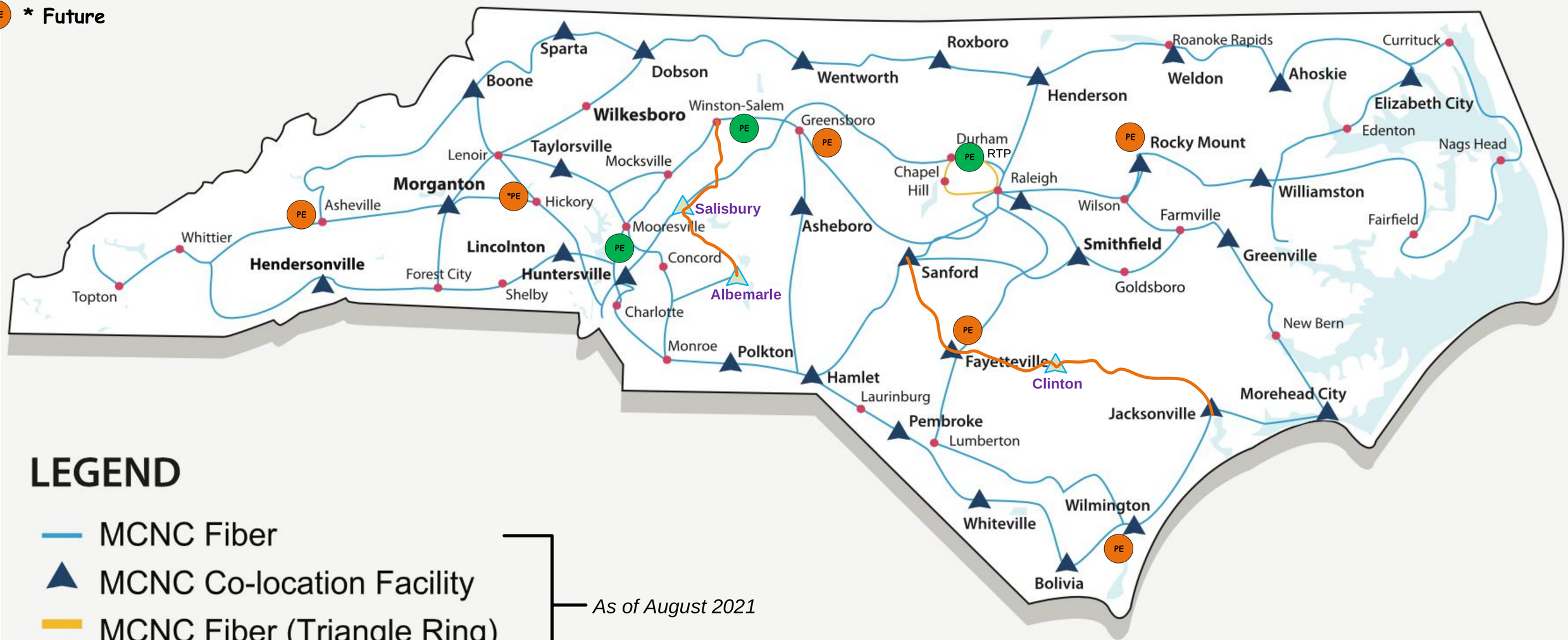

LEGEND

- MCNC Fiber
- MCNC Co-location Facility
- MCNC Fiber (Triangle Ring)
- City

As of August 2021

- Proposed Middle Mile Fiber Route
- Proposed Co-location Facility

MCNC®

Drawing/System ID: NCREN Map Propsd MM Fbr Rts/Co-Lo HL Perspect.	
Created By : Matt Valenzisi	Date/Time: 07/18/2022 23:31:30
Revised By : Matt Valenzisi	Date/Time: 09/18/2022 19:16:48
Reviewed By: Jeremy Geelen	Date/Time: 09/18/2022 19:16:48
Last Printed Date/Time:09/18/2022 19:16:48	

NOTE: Please reference attachment "MCNC Technical Details Proposed Project" for additional information.

File Name: MCNC Logical Network Diagrams

!!! MCNC CONFIDENTIAL !!!
!!! Do NOT Distribute !!!